FKW-11000-1

Single-Phase Multifunction Meter

User Manual

Version: V1

September 1, 2023

ATelec®
AUSTRALIA

This manual may not be reproduced in whole or in part by any means without the express written permission from MATelec Australia.
The information contained in this manual is believed to be accurate at the time of publication; however, MATelec Australia assumes no responsibility for any errors which may appear here and reserves the right to make changes without notice. Please consult MATelec Australia or your local representative for the latest product specifications.

Standards Compliance

DANGER

This symbol indicates the presence of danger that may result in severe injury or death and permanent equipment damage if proper precautions are not taken during the installation, operation or maintenance of the device.

CAUTION

This symbol indicates the potential of personal injury or equipment damage if proper precautions are not taken during the installation, operation or maintenance of the device.

DANGER

Failure to observe the following instructions may result in severe injury or death and/or equipment damage.

- Installation, operation and maintenance of the meter should only be performed by qualified, competent personnel that have the appropriate training and experience with high voltage and current devices. The meter must be installed in accordance with all local and national electrical codes.
- Ensure that all incoming AC power and other power sources are turned OFF before performing any work on the meter.
- Before connecting the meter to the power source, check the label on top of the meter to ensure that it is equipped with the appropriate power supply, and the correct voltage and current input specifications for your application.
- During normal operation of the meter, hazardous voltages are present on its terminal strips and throughout the connected potential transformers (PT) and current transformers (CT). PT and CT secondary circuits are capable of generating lethal voltages and currents with their primary circuits energized. Follow standard safety precautions while performing any installation or service work (i.e. removing PT fuses, shorting CT secondaries, …etc).
- Do not use the meter for primary protection functions where failure of the device can cause fire, injury or death. The meter should only be used for shadow protection if needed.
- Under no circumstances should the meter be connected to a power source if it is damaged.
- To prevent potential fire or shock hazard, do not expose the meter to rain or moisture.
- Setup procedures must be performed only by qualified personnel familiar with the instrument and its associated electrical equipment.
- DO NOT open the instrument under any circumstances.

Limited warranty

- MATelec Australia offers the customer a minimum of 12-month functional warranty on the meter for faulty parts or workmanship from the date of dispatch from the distributor. This warranty is on a return to factory for repair basis.
- MATelec Australia does not accept liability for any damage caused by meter malfunctions. MATelec Australia accepts no responsibility for the suitability of the meter to the application for which it was purchased.
- Failure to install, set up or operate the meter according to the instructions herein will void the warranty.
- Only MATelec Australia's duly authorized representative may open your meter. The unit should only be opened in a fully anti-static environment. Failure to do so may damage the electronic components and will void the warranty.

Table of Contents

Chapter 1 Introduction 1
1.1 Overview 1
1.2 Features 1
1.3 Applications 1
1.4 Getting more information 2
Chapter 2 Installation 3
2.1 Appearance 3
2.2 Unit Dimensions 4
2.3 Terminal Dimensions 4
2.4 Mounting 4
2.5 Input Wiring 5
2.6 RS-485 Wiring 5
2.7 Energy Pulse Output Wiring 6
Chapter 3 Front Panel 7
3.1 LCD Display 7
3.1.1 LED Pulse Output 7
3.1.2 LCD Display Symbols 7
3.2 LCD Testing 8
3.3 Display Screen Types 8
3.4 Setup Configuration via the Front Panel 8
3.4.1 Functions of buttons 8
3.4.2 Setup Menu 9
3.4.3 Configuration 10
Chapter 4 Modbus Register Map 11
4.1 Basic Measurements 11
4.2 Energy Measurements 11
4.3 Device Setup 12
4.3.1 Basic Setup Parameters 12
4.3.2 Communication Setup Parameters 12
4.4 Time 12
4.5 Clear Control 13
4.6 Meter Information 13
Appendix A Technical Specifications 14
Appendix B Standards Compliance 15
Contact us 16

Chapter 1 Introduction

This manual explains how to use the FKW-11000-1 Single-Phase Multifunction Meter. Throughout the manual the term "meter" generally refers to all models.

This chapter provides an overview of the FKW-11000-1 meter and summarizes many of its key features.

1.1 Overview

The FKW-11000-1 Single-Phase Multifunction Meter is MATelec Australia's latest offer for the low voltage energy metering market featuring DIN rail mount, compact construction, 63A direct input and high accuracy measurements. The FKW-11000-1 complies with the IEC 62053-21 Class 1 kWh Accuracy Standard. In addition, the FKW-11000-1 has received the Certificate of Approval from The National Measurement Institute (NMI) of Australia and been verified by UL with reference to NMI M6-1 Electricity Meters, Part 1: Metrological and Technical Requirements. With the standard RS485 port and Modbus RTU protocol, the FKW-11000-1 becomes a vital component of an intelligent, multifunction monitoring solution for any Energy Management Systems.

1.2 Features

- IEC 62053-21 Class 1 and NMI M6-1 Class 1 Certified
- Direct Input up to 63A without external CT
- Low starting current @ 20mA
- Multifunction measurements
  - Voltage, Current, kW, kvar, kVA, PF and Frequency
  - kWh and kvarh Imp/Exp/Tot/Net and kVAh
  - Device Operating Time (Running Hour)
  - Front Panel & Communication Programming Counters
- 8-digit Multifunction LCD Display
- Self-powered, no external control power required
- kWh LED Pulse Output
- Solid State Energy Pulse Output @ 1000 imp/kWh
- Standard RS485 port with Modbus RTU support
- Easy installation with DIN rail mounting, no tools required

1.3 Applications

The FKW-11000-1 can be used to monitor a 2-wire single-phase circuit. Modbus RTU communications allow real-time data and other information to be transmitted across a RS485 network to an Integrated Energy Management System such as PecStar® iEMS.

The FKW-11000-1 comes standard with one front panel LED Pulse Output and one Solid State Digital Outputs for kWh and kvarh pulsing. Energy Pulse Outputs are typically used for accuracy testing. Energy pulsing can be enabled via communications or through the front panel. The pulse constant is 1000 imp/kWh (1 pulse per Wh) and pulse width is fixed at 80ms±20ms.

The FKW-11000-1 comes with an 8-digit LCD display for the kWh Imp/Exp, kvarh Imp/Exp and kVAh counters with a resolution of 0.01 kXh and a maximum value of 1,000,000.00. When the maximum value is

reached, it will automatically roll over to zero. The kXh counter can be reset manually via communications or the front panel and preset to a user-defined value only via communications.

The following figure illustrates a typical application where the FKW-11000-1s are used in an Energy Management System.

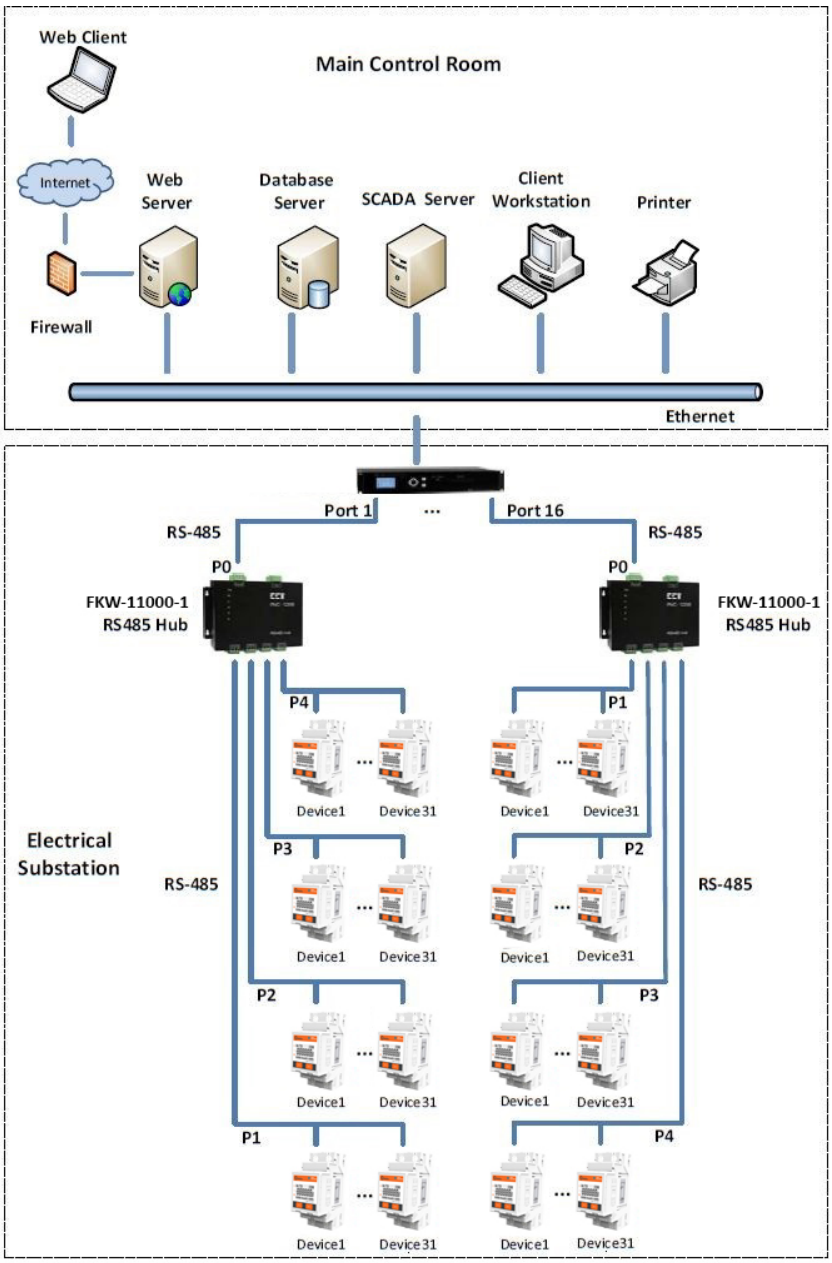

1.4 Getting more information

Additional information is available from MATelec Australia via the

following sources:

- Visit **www.matelecaustralia.com.au**
- Contact your local representative
- Contact MATelec Australia directly via email or telephone

Chapter 2 Installation

Caution

Installation of the FKW-11000-1 should only be performed by qualified, competent personnel that have the appropriate training and experience with high voltage and current devices. The meter must be installed in accordance with all local and national electrical codes.

During the operation of the meter, hazardous voltages are present at the input terminals. Failure to observe precautions can result in serious or even fatal injury and equipment damage.

2.1 Appearance

	Terminal	
A.	1, 2	L, N from Source LCD
B.	N/A	Display
C.	5, 6	Pulse Output (E+, E-) LED
D.	N/A	Pulse Output Buttons
E.	N/A	RS-485 (D+, D-)
F.	7, 8	L', N' to Load
G.	3, 4	

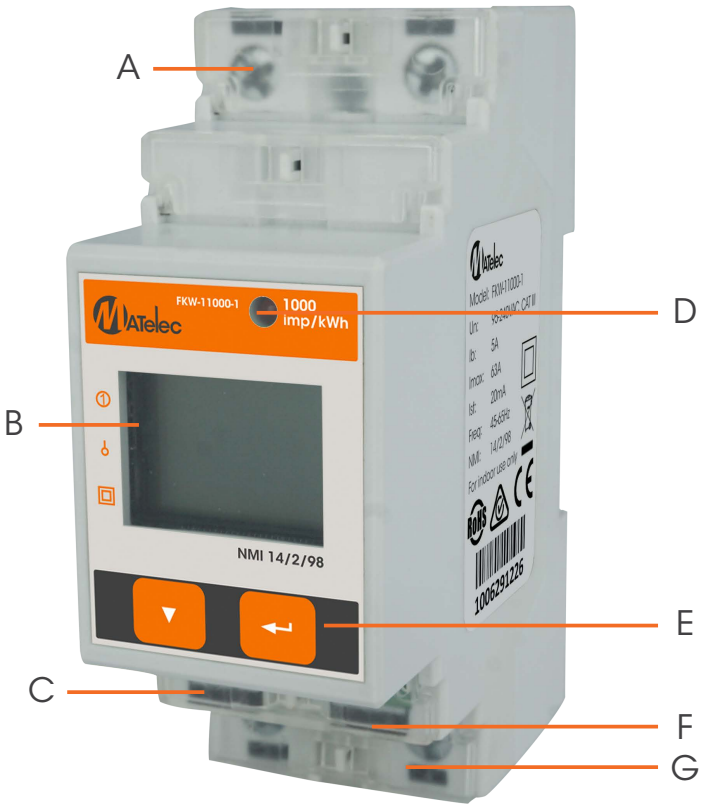

Figure 2-1 Appearance

2.2 Unit Dimensions

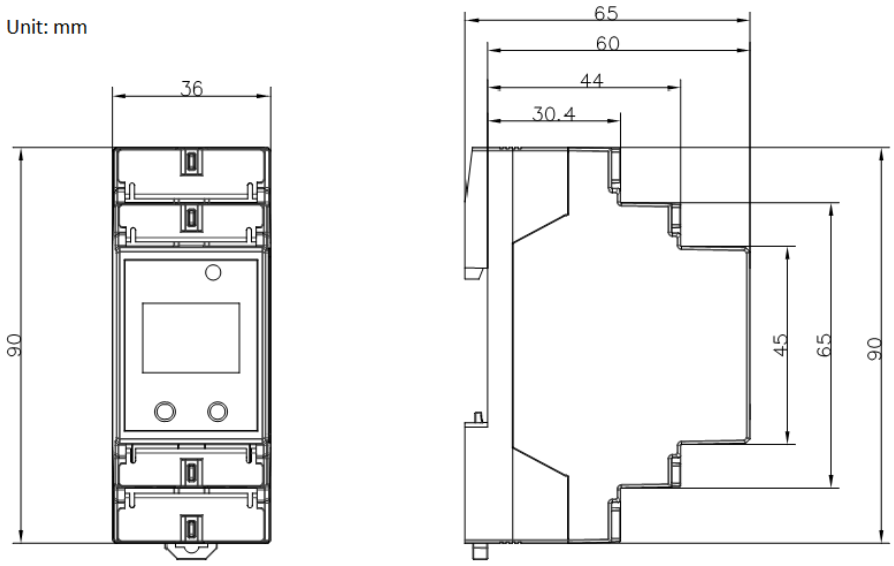

Main View **Side View**

Figure 2-2 Unit Dimensions

2.3 Terminal Dimensions

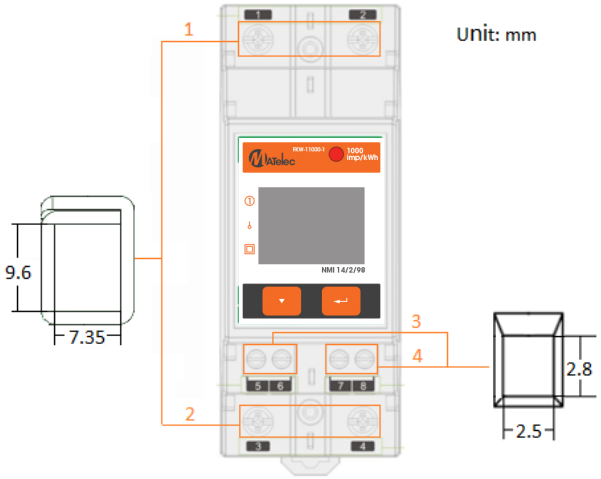

Figure 2-3 Terminal Dimensions

	Terminal	Terminal Dimensions	Max. Wire Size	Max. Torque
1	Input (L, N)	7.35mm x 9.6mm	25.0mm²	25.0 kgf.cm/M3 (21.7 lb-in)
2	Output (L', N')			
3	Pulse Output	2.5mm x 2.8mm	1.5mm²	4.5 kgf.cm/M3 (3.9 lb-in)
4	RS485			

Table 2-1 Terminal Dimensions

2.4 Mounting

The FKW-11000-1 should be installed in a dry environment with no dust and kept away from heat, radiation and electrical noise source.

Installation steps:

- Before installation, make sure that the DIN rail is already in place
- Move the installation clip at the bottom of the FKW-11000-1 downward to the “unlock” position
- Mount the FKW-11000-1 on the DIN rail
- Push the installation clip upward to the “lock” position to secure the FKW-11000-1 on to the DIN Rail

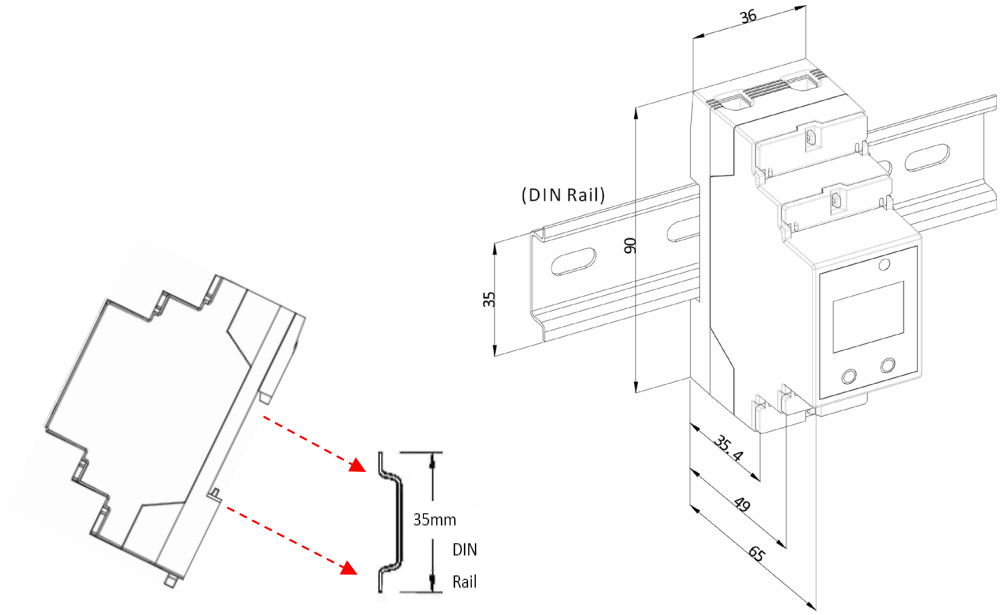

Figure 2-4 Installation

2.5 Input Wiring

Please consult the serial number label to ensure that the voltage and current input is less than or equal to the meter’s input specification.

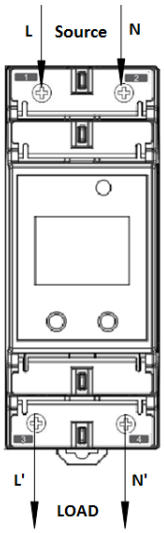

Figure 2-5 Input connections

2.6 RS-485 Wiring

The FKW-11000-1 provides one standard RS-485 port and supports the Modbus RTU protocol. Up to 32 devices can be connected on a RS-485 bus. The overall length of the RS-485 cable connecting all devices should not exceed 1200m.

If the master station does not have a RS-485 communications port, a RS-232/RS-485 or USB/RS-485 converter with optically isolated outputs and surge protection should be used. The following figure

illustrates the RS-485 communications connections on the FKW-11000-1.

Each FKW-11000-1 comes with a 120Ω Termination Resistor. It is recommended that a single termination resistor be used at the end of the RS-485 bus to prevent signal reflection.

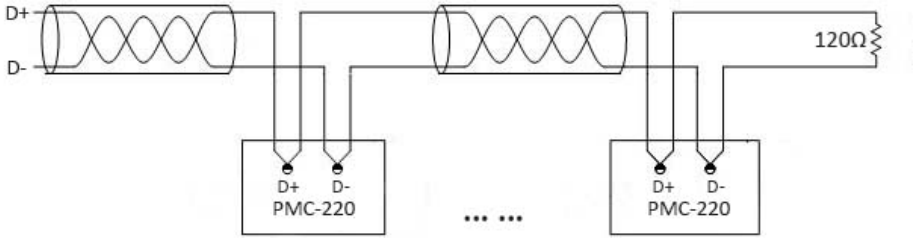

Figure 2-6 RS-485 Connections

2.7 Energy Pulse Output Wiring

The following figure illustrates the Pulse Output connection on the FKW-11000-1.

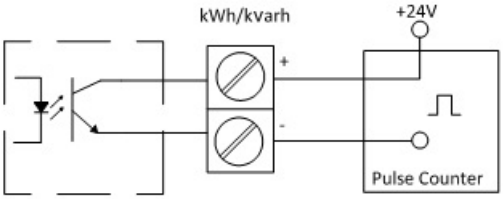

Figure 2-7 Energy Pulse Output Connections

Chapter 3 Front Panel

The meter's front panel is used for both display and configuration purposes. The LCD display screen and two buttons allow quick access to view measurements and meter information, configure the parameters and perform maintenance.

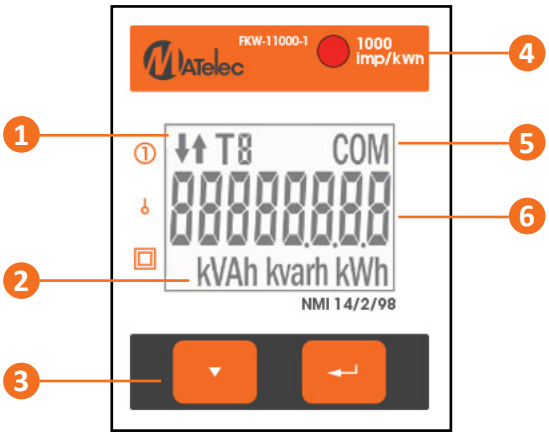

1. **Import/Export Indicator**
2. **Units**
3. **Button**
4. **LED Pulse Output**
5. **Comm. Indicator**
6. **Measurement**

Figure 3-1 Front Panel Display

3.1 LCD Display

3.1.1 LED Pulse Output

The FKW-11000-1 comes standard with a LED Pulse Output on its front panel, labeled **1000 Imp/ kWh**. The LED Pulse Output is used for kWh pulsing if the **PULSE** is ENABLED.

3.1.2 LCD Display Symbols

The following table shows the special LED display symbols:

Label	Description					
8.	A	B	C	D	E	F
	G	H	I	J	K	L
	M	N	O	P	Q	R
	S	T	U	V	W	Y
	0	1	2	3	4	
	5	6	7	8	9	

Table 3-1 LCD Display Symbols

3.2 LCD Testing

Pressing both the <↩> and the <▼> buttons simultaneously for 2 seconds enters the **LCD Test** mode. During testing, all LCD segments are illuminated and will blink on and off three times before returning to the **Data Display** mode.

3.3 Display Screen Types

The FKW-11000-1 has a default display which can be set as one of two modes: **Fixed** mode which displays kWh Imp statically and **Energy Auto-Scroll** mode which displays kWh Imp, kWh Exp, kvarh Imp, kvarh Exp and kVAh in sequence in 4 seconds interval. The **Energy Auto-Scroll** setup parameter can only be set via communications.

In **Data Display** mode, pressing the <▼> button scrolls to the next parameter while pressing the <↩> button toggles among **Basic Measurements**, **Energy Measurements** and **Programming Counters**.

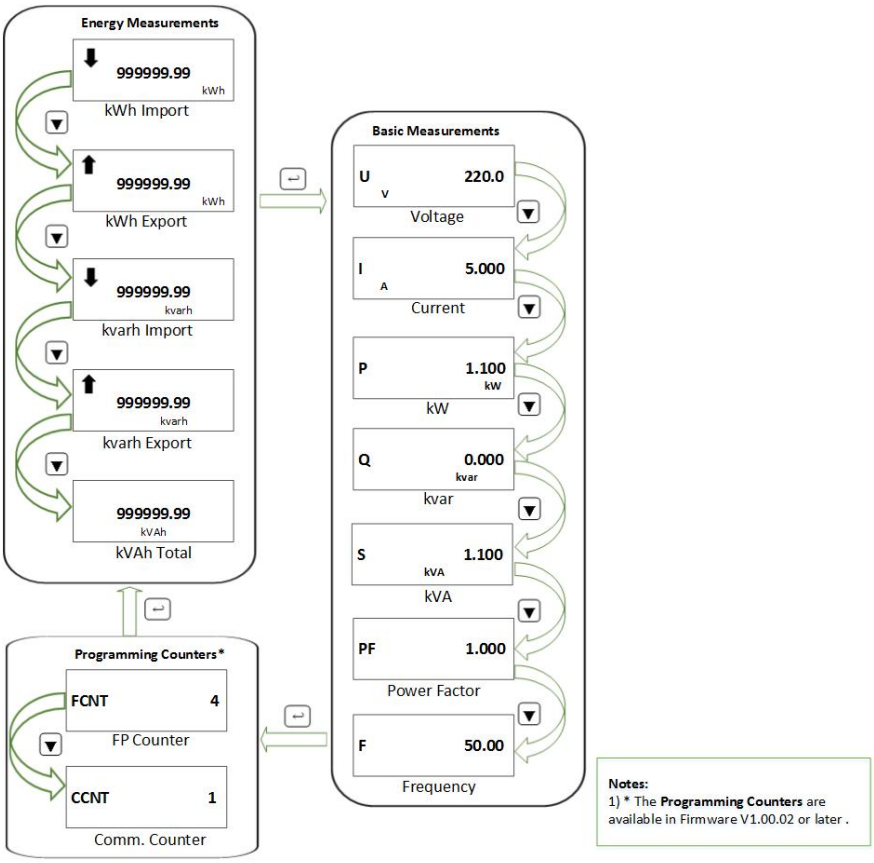

Figure 3-2 Measurements Screen

3.4 Setup Configuration via the Front Panel

Pressing the <↩> button for two seconds enters the **Setup Configuration** mode where the setup parameters can be changed. Upon completion, pressing the <↩> button for two seconds returns to the **Data Display** mode.

3.4.1 Functions of buttons

The two front panel buttons take on different meanings in the **Setup Configuration** mode and are described below:

<↩>: Pressing this button for two seconds toggles between **Data Display** mode and **Setup Configuration** mode. Once inside the **Setup Configuration** mode and at the main menu, pressing this button selects a parameter for modification. Once selected, the parameter value blinks while it's being changed. If the selected parameter is a numeric value, pressing this button shifts the cursor to the left by one position. When the cursor has reached the left-most digit, pressing this button again will save the new setting into memory. The parameter will also stop blinking once the value has been saved.

<▼>: Before an item is selected, pressing this button scrolls to the next setup parameter. If the selected parameter is a numeric value, pressing this button increments the selected digit. If the selected parameter is an enumerated value, pressing this button scrolls through the enumerated list. Pressing the <↩> button will save the current enumerated value.

Making setup changes:

- Press the <↩> button for two seconds to enter the **Setup Configuration** mode.
- Press the <▼> button to advance to the Password page.
- A correct password must be entered before changes are allowed. The factory default password is zero. Press the <▼> button to select the parameter for modification. Use the <▼> and <↩> buttons to enter the correct password.
- Use the <▼> button to scroll to the desired parameter.
- Press the <↩> button to select the parameter. Once selected, the parameter value will blink.
- Use the <↩> and <▼> buttons to make modification to the selected parameter.
- Pressing the <↩> button for two seconds to exit the **Setup Configuration** mode.

3.4.2 Setup Menu

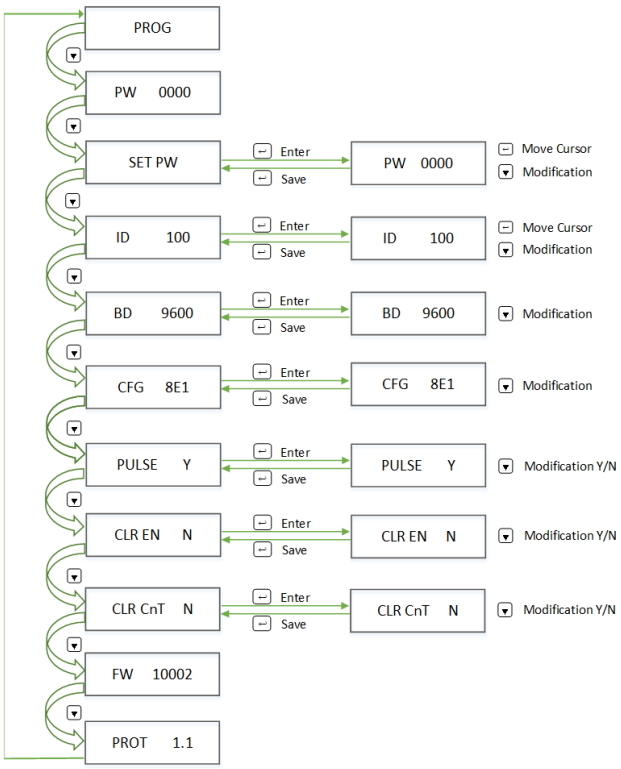

Figure 3-3 Setup Menu

3.4.3 Configuration

The Setup Configuration mode provides access to the following setup parameters:

Label	Parameters	Description	Option (value)	Default
PROG	Programming	Setup Configuration Mode	/	/
PW	Password	Enter Password	0~9999	0
SET PW	Set Password	Enter New Password	0~9999	0
ID	Unit ID	Com. Unit ID	1~247	Note 1
BD	Baud Rate	Data rate in bits per second (bps)	1200/2400/4800/ 9600/19200	9600
CFG	Comm. Port Configuration	Data Format	8N2/8O1/8E1/8N1	8E1
PULSE	Energy Pulsing	Enable Energy Pulsing	YES/NO	NO
CLR EN	Clear Energy	Clear Energy	YES/NO	NO
CLR CnT[2]	Clear Counter	Clear FP Counter and Comm. Counter	YES/NO	NO
FW	Version	Firmware Version	For example, 10002 means the firmware version is V1.00.02.	/
PROT	Protocol	Protocol Version	e.g. 1.1 means V1.1	/

Notes:
1. The default Unit ID is the last 2 digits of the **Serial Number**.
2. Available in Firmware V1.00.02 or later.

Table 3-2 Setup Parameters

Chapter 4 Modbus Register Map

This chapter provides a complete description of the Modbus register map (**Protocol Version 1.1**) for the FKW-11000-1 to facilitate the development of 3rd party communications driver for accessing information on the FKW-11000-1. The FKW-11000-1 supports the following Modbus functions:

1) Read Holding Registers (Function Code 0x03)
2) Preset Multiple Registers (Function Code 0x10)

For a complete Modbus Protocol Specification, please visit http://www.modbus.org.

The following table provides a description of the different data formats used for the Modbus registers. The FKW-11000-1 uses the Big Endian byte ordering system.

Format	Description
UINT16/INT16	Unsigned/Signed 16-bit Integer
UINT32/INT32	Unsigned/Signed 32-bit Integer
Float	IEEE 754 32-bit Single Precision Floating Point Number

4.1 Basic Measurements

Register	Property	Description	Format	Scale	Unit
0000	RO	V	Float	x1	V
0002	RO	I	Float		A
0004	RO	kW	Float		kW
0006	RO	kvar	Float		kvar
0008	RO	kVA	Float		kVA
0010	RO	P.F.	Float		-
0012	RO	Frequency	Float		Hz
0014~0037		Reserved			
0038	RO	FP Counter*[1]	UINT16	x1	
0039	RO	Comm. Counter*[2]	UINT16		

*Available from Firmware V1.00.02 or later

Table 4-1 Basic Measurements

Notes:

1) The **FP Counter** is incremented every time the **Clear Energy** action is performed via the Front Panel.
2) The **Comm. Counter** is incremented every time the **Clear Energy** action is performed or the **CT Polarity** is changed via communications.

4.2 Energy Measurements

Register	Property	Description	Format	Scale	Unit
0040	RW	kWh Import	INT32	x0.01	kWh
0042	RW	kWh Export	INT32		
0044	RO	kWh Net	INT32		
0046	RO	kWh Total	INT32		
0048	RW	kvarh Import	INT32	x0.01	kvarh
0050	RW	kvarh Export	INT32		
0052	RO	kvarh Net	INT32		
0054	RO	kvarh Total	INT32		
0056	RW	kVAh	INT32	x0.01	kVAh

Table 4-2 Energy Measurements

Notes:

1) The Energy registers have a maximum value of 100,000,000 in units of 0.01 kXh (1,000,000.00) and will roll over to zero automatically when it is reached.
2) The kXh Imp, Exp and Total registers' values are positive, and the kXh Net registers' can be either positive or negative, where a positive value means kXh Imp is greater than kXh Exp while a negative value means kXh Exp is greater than kXh Imp.

3) The kXh counter can be reset manually via communications or the front panel and preset to a user-defined value only via communications.

4.3 Device Setup

4.3.1 Basic Setup Parameters

Register	Property	Description	Format	Range/Default*
6000	RW	PF Convention	UINT16	0=IEC*, 1=IEEE, 2=-IEEE
6001	RW	CT Polarity[1]	UINT16	0=Normal*, 1=Reversed
6002	RW	Solid State Pulse Output[2]	UINT16	0=Disabled, 1=kWh Imp* 2=kWh Exp, 3=kWh Total 4=kvarh Imp, 5=kvarh Exp 6=kvarh Total
6003	RW	LED Pulse Output Enable	UINT16	0=Disabled, 1=Enabled*
6004	RW	Default Display[3]	UINT16	0=kWh Import* 1=Energy Auto-Scroll

Table 4-3 Basic Setup Parameters

Notes:

1) CT Polarity can only be changed via communications.
2) The Pulse Constant is fixed at 1000 imp/kXh.
3) The **Energy Auto-Scroll** mode displays the following energy measurements in sequence in 4 seconds interval: kWh Import, kWh Export, kvarh Import, kvarh Export and kVAh.

4.3.2 Communication Setup Parameters

Register	Property	Description	Format	Range/Default*
6100	Reserved			
6101	RW	Unit ID	UINT16	1 to 247, See Note 1
6102	RW	Baud Rate	UINT16	0=1200, 1=2400, 2=4800 3=9600*, 4=19200
6103	RW	Comm. Config.	UINT16	0=8N2, 1=8O1 2=8E1*, 3=8N1

Note:

1. The default value of the Unit ID is the last 2 digits of the **Serial Number**.

Table 4-4 Communication Setup

4.4 Time

There are two sets of Time registers supported by the FKW-11000-1 – Year / Month / Day / Hour / Minute / Second (Register # 60000 to 60002) and UNIX Time (Register # 60004). When sending time to the FKW-11000-1 over Modbus communications, care should be taken to only write one of the two Time register sets. All registers within a Time register set must be written in a single transaction. If registers 60000 to 60004 are being written to at the same time, both Time register sets will be updated to reflect the new me specified in the UNIX Time register set (60004) and the time specified in registers 60000-60002 will be ignored. Writing to the Millisecond register (60003) is optional during a Time Set operation. When broadcasting time, the function code must be set to 0x10 (Pre-set Multiple Registers). Incorrect date or time values will be rejected by the meter. In addition, a empting to write a Time value less than Jan 1, 2000 00:00:00 will be rejected.

Register		Property	Description	Format	Note
60000	9000	RW	High-order Byte: Year	UINT16	0-37 (Year-2000)
			Low-order Byte: Month		1 to 12
60001	9001	RW	High-order Byte: Day	UINT16	1 to 31
			Low-order Byte: Hour		0 to 23
60002	9002	RW	High-order Byte: Minute	UINT16	0 to 59
			Low-order Byte: Second		0 to 59
60003	9003	RW	Millisecond	UINT16	0 to 999

60004	9004	RW	UNIX Time	UINT32	0x386D4380 to 0x 7FE8177F The corresponding time is 2000.01.01 00:00:00 to 2037.12.31 23:59:59 (GMT 0:00 Time Zone)

Table 4-5 Time Registers

4.5 Clear Control

Register	Property	Description	Format	Note
9600	WO	Clear Energy	UINT16	Writing "0xFF00" to this register will clear all energy registers.
9601	WO	Clear Programming Counters*	UINT16	Writing "0xFF00" to this register will clear both the FP and Comm. Programming Counters.

*Available in Firmware V1.00.02 or later

Table 4-6 Clear Control

4.6 Meter Information

Register Address		Property	Description	Format	Note
60200~60219	9800~9819	RO	Meter model[1]	UINT16	See Note 1
60220	9820	RO	Firmware Version	UINT16	e.g. 10000 shows the version is V1.00.00
60221	9821	RO	Protocol Version	UINT16	e.g. 10 shows the version is V1.0
60222	9822	RO	Firmware Update Date: Year-2000	UINT16	e.g. 140110 means January 10, 2014
60223	9823	RO	Firmware Update Date: Month	UINT16	
60224	9824	RO	Firmware Update Date: Day	UINT16	
60225	9825	RO	Serial Number	UINT32	

Table 4-7 Meter Information

Note:

1) The Meter Model appears in registers 60200 to 60219 and contains the ASCII encoding of the string "FKW-11000-1" as shown in the following table.

Register	Value(Hex)	ASCII
60200	0x50	P
60201	0x4D	M
60202	0x43	C
60203	0x2D	-
60204	0x32	2
60205	0x32	2
60206	0x30	0
60207-60219	0x20	Null

Table 4-8 ASCII Encoding of "FKW-11000-1"

Appendix A Technical Specifications

Measurement Inputs (L, N, L', N')			
Voltage (Un)	220VAC	230VAC	240VAC
Overrange (% Un)	120%	115%	110%
Range (V)	95-264VAC		
Current (Ib / Imax) Starting Current Minimum Current	5A / 63A 0.4% Ib (0.02A) 5% Ib (0.25A)		
Frequency	45Hz-65Hz		
Power Supply	Self-powered from 95 to 264VAC		
Maximum Wire Size	25 mm^2 (4AWG)		
Torque for L, N Terminals	2.5 N.m		
Communications (D+, D-)			
RS-485 (Modbus RTU)	Optically isolated @ 5kVrms		
Maximum Wire Size	1.5mm^2 (16AWG)		
Torque for RS485 Terminals	0.45 N.m		
Pulse Output (E+, E-)			
Type	Optically Isolated Solid State Relay		
Max. Load Voltage	80 VDC		
Max. Forward Current`	50 mA		
Maximum Wire Size	1.5 mm^2 (16AWG)		
Torque for RS485 Terminals	0.45 N.m		
Environmental Conditions			
Operating Temp. Storage Temp. Humidity Atmospheric pressure Pollution Degree	-25°C to +70°C -40°C to +85°C 5% to 95% non-condensing 70kPa to 106kPa 2		
Mechanical Characteristics			
Unit Dimensions Shipping Weight Shipping Dimensions Mounting IP Rating	36x65x90mm 0.18kg 120x103x42mm DIN-Rail Mounting IP51 (Front), IP30 (Body)		

Accuracy

Parameters	Accuracy	Resolu on
Voltage	±0.5% reading	0.1V
Current	±0.5% reading	0.001A
kW, kVA	±1.0%	0.001kX
kvar	±1.0%	0.001kvar
kWh	IEC 62053-21 Class 1 NMI M6-1 Class 1	0.01kWh
kvarh	IEC 62053-23 Class 2	0.01kvarh
kVAh	IEC 62053-23 Class 1	0.01kVAh
P.F	±1.0%	0.001
Frequency	±0.02Hz	0.01Hz

Appendix B Standards Compliance

Safety Requirements	
CE LVD 2014 / 35 / EU	EN 61010-1: 2010 EN 61010-2-030: 2010
Insulation AC Voltage Impulse voltage	IEC 62052-11: 2003 IEC 62053-21:2003 NMI M6-1 4kV @ 1 minute 12kV+0%, -15%, 1.2/50µs (NMI M6-1)
Electromagneti Compability EMC 2014/30/EU (EN 61326: 2013)	
Immunity Tests	
Electrostatic discharge	EN 61000-4-2:2009
Radiated fields	EN 61000-4-3: 2006+A1: 2008+A2: 2010
Fast transients	EN 61000-4-4:2012
Surges	EN 61000-4-5:2014
Conducted disturbances	EN 61000-4-6:2014
Magnetic Fields	EN 61000-4-8:2010
V Dips, Interruptions & Variations	EN 61000-4-11:2004
Oscillatory waves	EN 61000-4-12:2006
Mechanical Tests	
Spring hammer test	IEC 62052-11: 2003
Vibration Test	IEC 62052-11: 2003
Shock Test	IEC 62052-11: 2003
Revenue Metering Approval	
NMI M6-1 of Australia	Approval Mark: NMI 14/2/98 UL Ref. # R11353641-CETA-NMI M6-1

Contact us

MATelec Australia Email: customer@matelecaustralia.com.au
Web: www.matelecaustralia.com.au